WatchNET IoT

WLRI-S41

Wireless CO_2/Temperature/Humidity Sensor

This wireless CO_2 (carbon dioxide) detector makes it ideal to install in public places, greenhouses, gym, etc. A proper CO_2 measuring device is integral to a good facility safety system, as it gives a real-time CO_2 measure and alarm to protect your employees from dangerous gases in the work area.

Features:

- Super Long Range Signal Penetration
- Easy Installation
- Frequency Hopping Spread Spectrum (FHSS)
- Improved interference immunity
- Encrypt-RF™ Security (Diffie-Hellman Key Exchange + AES-128 CBC for sensor data messages)
- Over-the-air updates
- Interactive Watch*NET* IoT platform with dashboard, search and notification settings

Applications:

- Greenhouses
- Gym and public areas
- Workplace
- Factory and manufacturing
- Offices and other workplaces

IAQ
Indoor Air Quality

Schematic Diagram:

Green house

Gym

Technical Specifications

Electrical	
Power Supply	DC Power Supply, DC12V/1A*
Operating Current 1	80mA (no RF signal transmission)
Operating Current 2	120mA (with RF signal emission)
CO_2 Sensor	
Working Voltage	4.5VDC - 5.5VDC
Working Current	<85mA
Accuracy	+/- (100ppm+6%{Value})
Range	0-5000ppm
Worm-up Time	3min
Response Time	T<90s
Output	PWM UART
Frequency	
TX Power	19dBm±1dBm
Rx Sensitivity	-136dBm (LoRa,Spreading Factor=12,Bit Rate=293bps) -121dBm (FSK,Frequency deviation=5kHz, Bit Rate=1.2kbps)
Antenna Type	Built-in antenna
Communication Range	Up to 500m/0.310miles, the actual transmission distance depends on the environment*
Data Transfer Rate	0.3kbps~50kbps
Spread Technique	LoRa/FSK
Available Frequency	EU863-870, US902-928, Configured before shipment
Physical	
Dimension	111mm x 86mm x 42mm / 4.37” x 3.38” x 1.61”
Protection class	Main Part IP20
Environment Temperature Range	-20^{0}C ~ 55^{0}C / -4^{0}F ~ 131^{0}F
Environment Humidity Range	<90%RH (No condensation)
Storage Temperature	-40^{0}C ~ 85^{0}C / -40^{0}F ~ 185^{0}F

** Actual signal range may vary depending on the environment.*

Dimensions

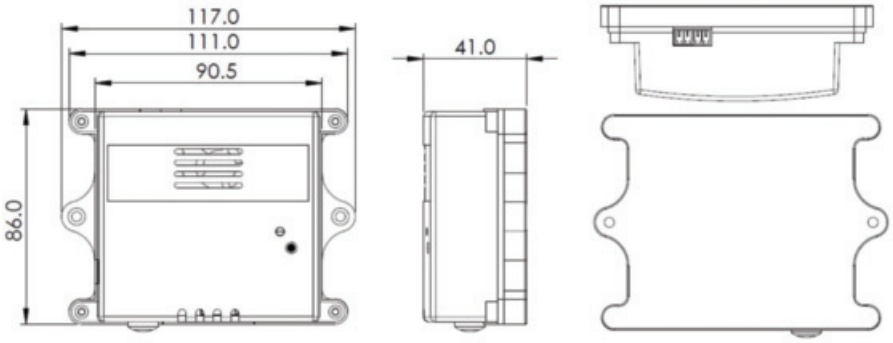

** All product names, logos and brands are property of their respective owners. All company products and service names used on this box/website/brochure are for identification purposes only. Use of these names, logos and brands does not imply endorsement. 2021 WatchNET Inc.*
© All Rights Reserved.
All product specifications are subject to change without notice.

CANADA:
351 Ferrier Street, Unit 5
Markham, ON L3R 5Z2
Toll Free: 1-866-843-6865
Tel: 416-410-6865

USA:
171 Cooper Ave. Suite 110
Tonawanda, NY 14150 USA
Toll Free: 1-866-843-6865
Local: 1-716-877-7277

UAE:
PO Box No 126312
Office Suite 703, Oxford Towers
Business Bay, Dubai, UAE
Tel: + 971 4 2767117

Rev. Dec., 2021

www.watchnetiot.com
info@watchnetiot.com